Hybrid DVR

8CH Hybrid DVR

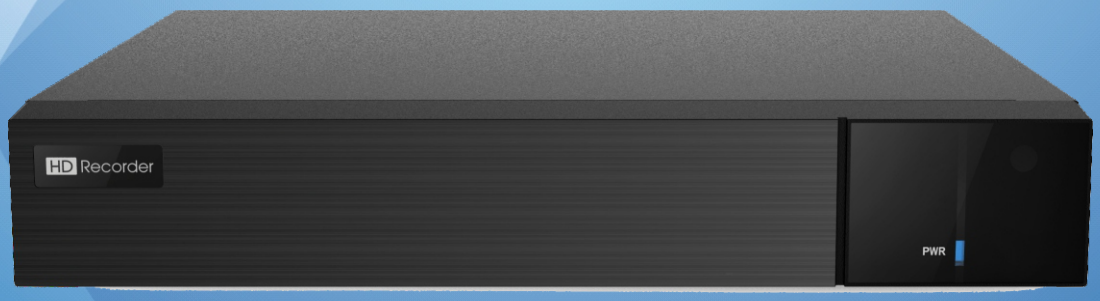

ED8008H5-BN2

HD H.265 DDNS Network PTZ Audio MIC Mobile CMS USB Mouse E-mail

ED8008H5-BN2 series are 8 CH 1080P high definition DVRs with ability to connect analog and IP cameras simultaneously, which adopt the standard H.265 high profile compression format and the most advanced SOC technique to ensure real time recording in each channel and realize outstanding robustness of the system. ED8008H5-BN2 8CH video input, 1 /1 CH audio input, simultaneous 8 CH playback.

The series of product can meet different security requirements of home, financial, commerce, enterprise, transportation and government, etc.

1080P Hybrid DVR

Features

- 8 CH DVR supports TVI / AHD/CVI 5MP/4MP/1080P/720P/WD1 video input 4 /
- 8CH DVR supports 2 / 4 CH 5MP / 4MP / 3MP /1080P / 960P /720P IP video input by default
- 4CH DVR: 4CH analog video input can be switched to 4CH IP video input
- 8CH DVR: 8CH analog video input can be switched to 8CH IP video input
- Adopt standard H.265 high profile compression format to get high-quality video at much lower bit rate
- Intuitive and user-friendly Graphics User Interface (GUI , window style operation by mouse
- Multi-mode recording: manual / timed / sensor / motion / AI recording
- Playback : 4 / 8 CH simultaneously playback
- Search: time slice, time, event, tag search
- Express and flexible backup via USB, network and so on
- Pentaplex: preview, record, playback, backup and remote access
- DHCP, DDNS, PPPoE network protocol
- Remote control via Web or CMS : preview, playback, backup, PTZ and configuration
- Authorization management, log review and device status review
- Support 1080P output, true high resolution display
- Support PTZ preset and auto cruise, up to 255 presets and 8 cruises
- Support NAT function and QRCode scanning by mobile phones
- Powerful mobile surveillance by smart phones with iOS and Andriod OS

Dimensions

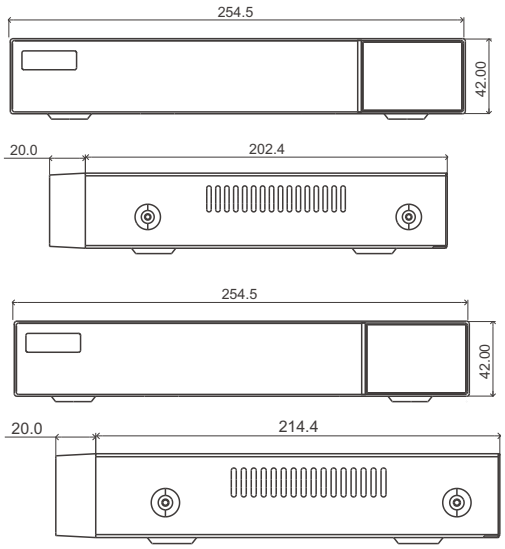

Rear Panel

ED8008H5-BN2

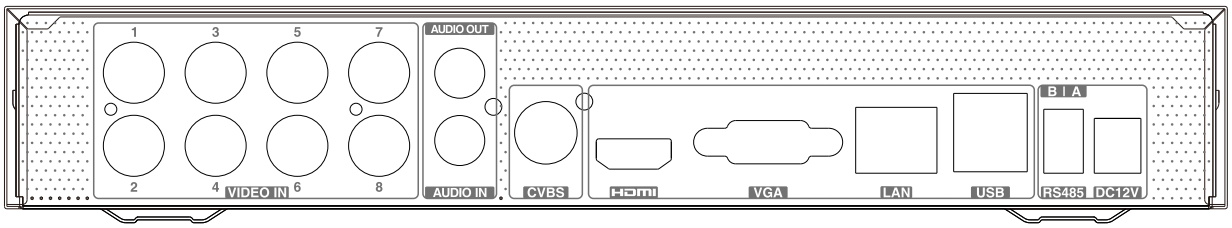

SPECIFICATIONS

Model		ED8008H5-BN2
System	OS	Embedded Linux
Video	Analog Video Input	BNC × 8
		BNC interface (1.0Vp-p; 75Ω)
		TVI/AHD/CVI: 5MP/4MP/1080P/720P/WD1
	IP Video Input	4CH (up to 12CH)
		Up to 5MP@30fps
	Total Input	12CH
	Output	HDMI × 1 : 1920 × 1080 / 1280 × 1024 / 1024 × 768 VGA × 1 : 1920 × 1080 / 1280 × 1024 / 1024 × 768 BNC × 1 : CVBS (used as the main or spot output)
	Compression	H.264/H.265/H.265+
	Multi-screen Display	1/4/6/8/9/13/16
Audio	Input	RCA × 1
	Output	RCA × 1 (linear, 600Ω)
	Two-way audio	Take up channel one audio input
	Compression	G.711(U/A)
Record	Resolution	5MP Lite/4MP Lite/1080P/1080P Lite/720P/WD1
	Frame Rate	Analog Channel: 5MP Lite :10fps; 4MP Lite/1080P : 12fps (PAL)/15fps (NTSC); 1080P Lite/720P/WD1 : 25fps (PAL)/30fps (NTSC) IP Channel: 25fps (PAL)/30fps (NTSC)
	Bit Rate	32Kbps ~ 4Mbps
	Mode	Manual, timer, motion, smart event
Playback	Playback	8CH
	Search	Time slice / time / event / tag search
	Smart Search	Highlight colors to display the camera record in a certain period of time, different colors refer to different record events
	Function	Play, pause, FF, FB, digital zoom, etc.
Alarm	Mode	Manual, motion, exception, smart event
	Input	No
	Output	No
AI Function	Smart Motion Detection Performance	8CH
	Perimeter Protection Performance	1CH
Network	Interface	RJ 45 100Mbps × 1
	Protocol	TCP / IP, IPv4, IPv6, PPPoE, DHCP, DNS, DDNS, UPnP, HTTP, HTTPs, 802.1x, FTP, RTP, RTSP, RTCP, NTP, SMTP, UDP, Websocket, SNMP, IGMP
	Incoming Bandwidth	32Mbps (max.60Mbps)
	Outgoing Bandwidth	60Mbps
	Client Connection	Max. 5 users access
Mobile Device	OS	iOS, Andriod
Storage	HDD	SATA × 1, up to 10TB
Backup	Local Backup	U disk, USB mobile HDD
	Network Backup	Yes
Port	RS 485	RS 485 × 1 (half-duplex)
	USB	USB 2.0 × 2 (in the rear panel)
	Remote Controller	Optional
Others	Power Supply	DC12V / 2A
	Consumption	≤8W(without HDD)
	Dimensions(mm)	255× 222× 42(W × D × H)
	Working Environment	-10~50°C, 10%~90% (humidity)
	Certificate	CE, FCC
	Environmental Protection	Comply with Directive EU RoHS, WEEE, REACH