ED9308H5NV-8P-3

8MP/6MP/5MP/4MP/3MP/1080P/720P HD PoE Networking Video Recorder(NVR)

HD Output | HD IPC | DDNS | Network | PTZ | Audio | MIC | Mobile | CMS | USB | Mouse | E-mail | STD | VCA

ED93xxH5NV series are 4/8 CH 8MP/6MP/5MP/4MP/3MP/1080P/960P/720P high definition PoE NVRs, which adopt the most advanced SOC technique to ensure high definition recording in each channel and realize outstanding robustness of the system.

ED93xxH5NV series integrate with 4/8 PoE network ports and support 4/8 CH IPC direct connection to NVR, simultaneous 4/8 CH playback and 4K ultra high definition display. The series of product can meet different security requirements of home, financial, commerce, enterprise, transportation and government, etc.

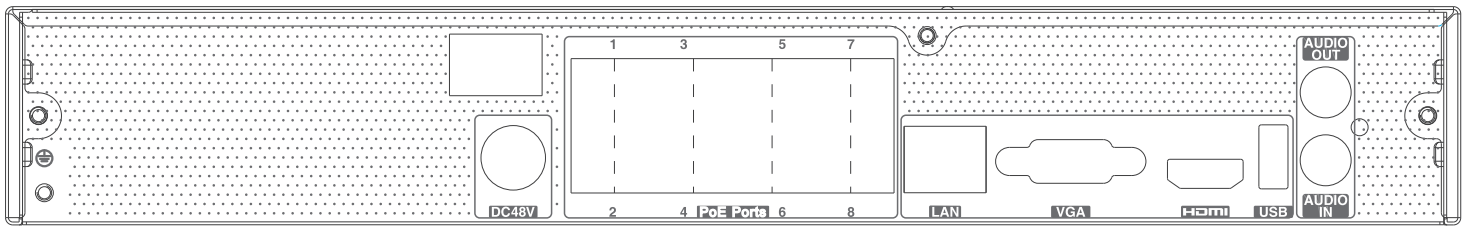

8MP/6MP/5MP/4MP/3MP/ 1080P/960P/720P HD PoE NVR

SPECIFICATIONS

Model		ED9308H5NV-8P-3
System	Compression	Standard H.265 / H.264
	OS	Embedded Linux
Video	Network Input	8CH IPC input
	Network Input Resolution	8MP/6MP/5MP/4MP/3MP/1080P/960P/720P/960H/D1/CIF
	Output	HDMI × 1 : 3840 × 2160 / 1920 × 1080 / 1280 × 1024/ 1024 × 768 VGA: 1920 × 1080 / 1280 × 1024/ 1024 × 768
Audio	Network Input	8 CH IPC audio input
	2-way Audio	RCA × 1
	Local Output	RCA × 1
	Compression	G.711(U/A)
Live View	Decoding Capability	1CH 8MP; 4CH 1080P
Record	Record Stream	Dual stream recording
	Resolution	8MP/6MP/5MP/4MP/3MP/1080P/960P/720P/960H/D1/CIF
	Frame Rate	NTSC:30fps; PAL:25fps
Playback	Simultaneous Playback	Max. 8 CH
	Search	Time slice / time / event / tag search
	Smart Search	Highlighted color to display the camera record in a certain period of time, different colors refers to different record events
	Function	Play, pause, FF, FB, digital zoom, etc.
Alarm	Mode	Manual, sensor, motion, exception
	Input	Support IPC alarm input
	Output	Support IPC alarm output
	Triggering	Record, snap, preset, e-mail, etc.
Network	Interface	RJ 45 × 1 (10/100/1000Mbps)
	Protocol	TCP / IP, PPPoE, DHCP, DNS, DDNS, UPnP, NTP, SMTP
	Access/Transfer Bandwidth	80/80 (Mbps)
Mobile Device	OS	iOS, Andriod
Storage	HDD	SATA3.0 × 1, max 8T
Backup	Local Backup	U disk, USB mobile HDD
	Network Backup	Yes
Port	USB	USB 2.0 × 2 (one in the front panel and the other in the rear panel)
	Remote Controller	Optional
PoE	PoE Ports	100M RJ45 × 8
	Standards	IEEE802.3af
	Output Power	≤ 96W
Others	Power Supply	DC 48V/2.5A
	Consumption	≤ 10W (without HDD)
	Dimensions (mm)	300 × 248 × 52 (W × D × H)
	Work Environment	-10 ~ 50 ℃ , 10% ~ 90% humidity

Features

- Support 8 CH 8MP/6MP/5MP/4MP/3MP/1080P/ 960P/720P/960H/DI/CIF IP input
- Adopt standard H.265 and H.264 high profile compression format to get high-quality video at much lower bit rate
- Intuitive and user-friendly Graphic User Interface (GUI), Windows style operation by mouse
- Multi-mode recording: manual / timer / motion / sensor/smart events
- Playback : 8CH simultaneous playback
- Search : time slice, time, event, tag, smart search
- Express and flexible backup via USB, network and so on
- Pentaplex : preview, record, playback, backup and remote access
- DHCP, DDNS, PPPoE network protocol and CMS supported
- Remote control via Web or CMS : preview, playback, backup, PTZ and configuration
- 8 PoE network ports, support IPC direct connection to NVR; support PoE power supply
- Dual stream technology for local storage with high definition, remote network transmission and remote surveillance with mobile device
- Multi-user online simultaneously
- Authorization management, log view and device status view
- 4K output, true high resolution display
- Support NAT function and QRCode scanning by mobile phones
- Powerful mobile surveillance by smart phones with iOS and Andriod OS
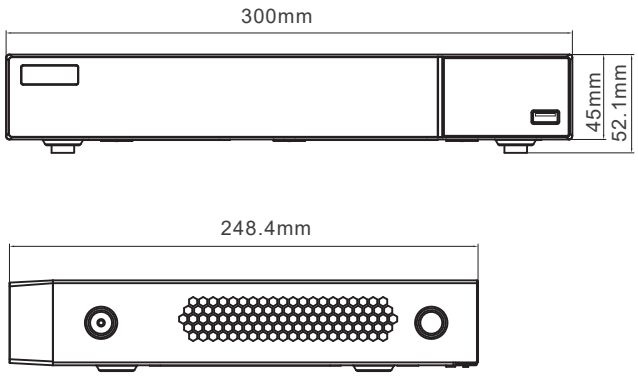
DIMENSIONS